# Strategies towards sustainable and reliable multimodal transport in the Randstad


TU Delft

# Contents

# Metropolitan areas in northwestern Europe

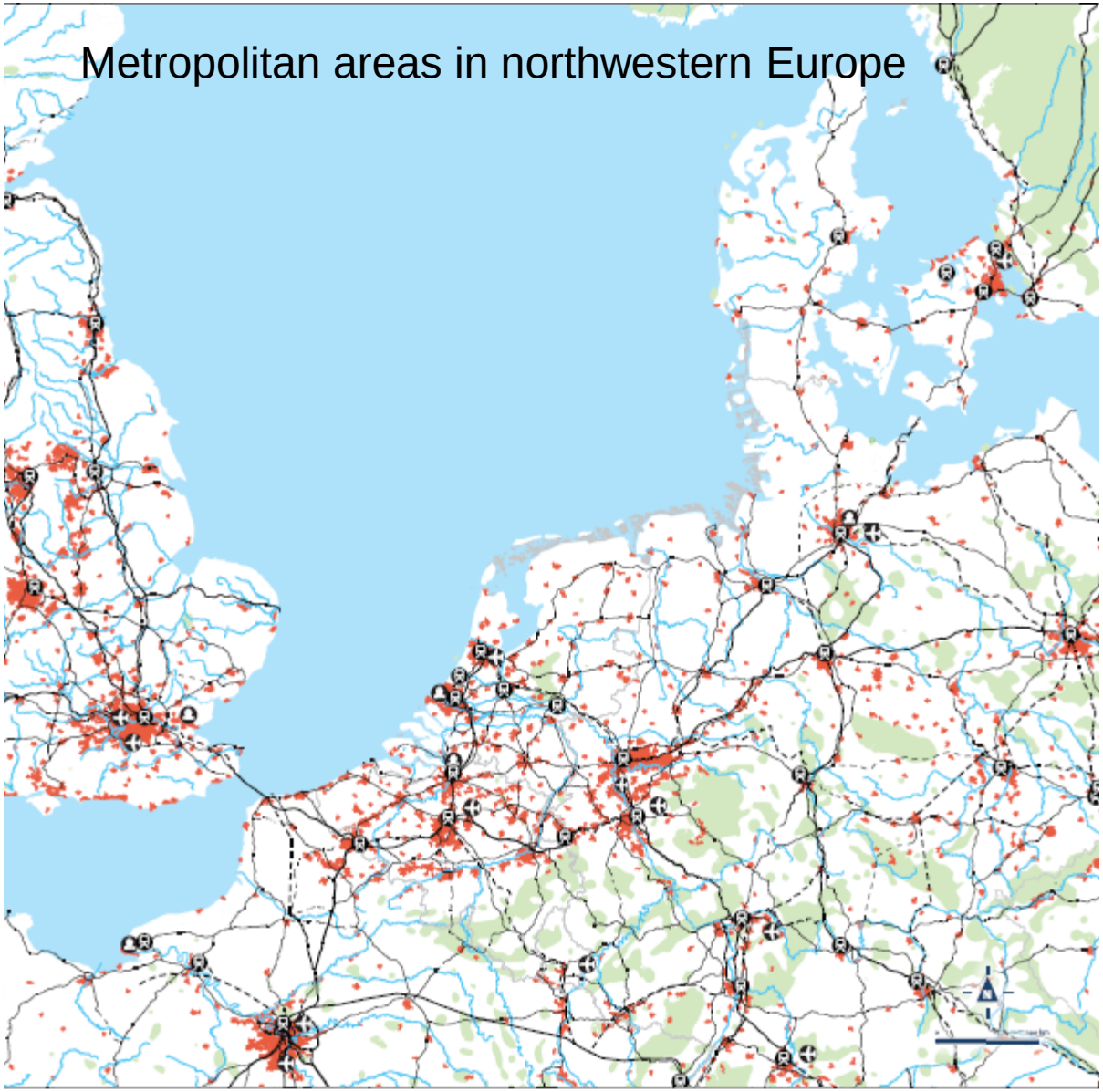

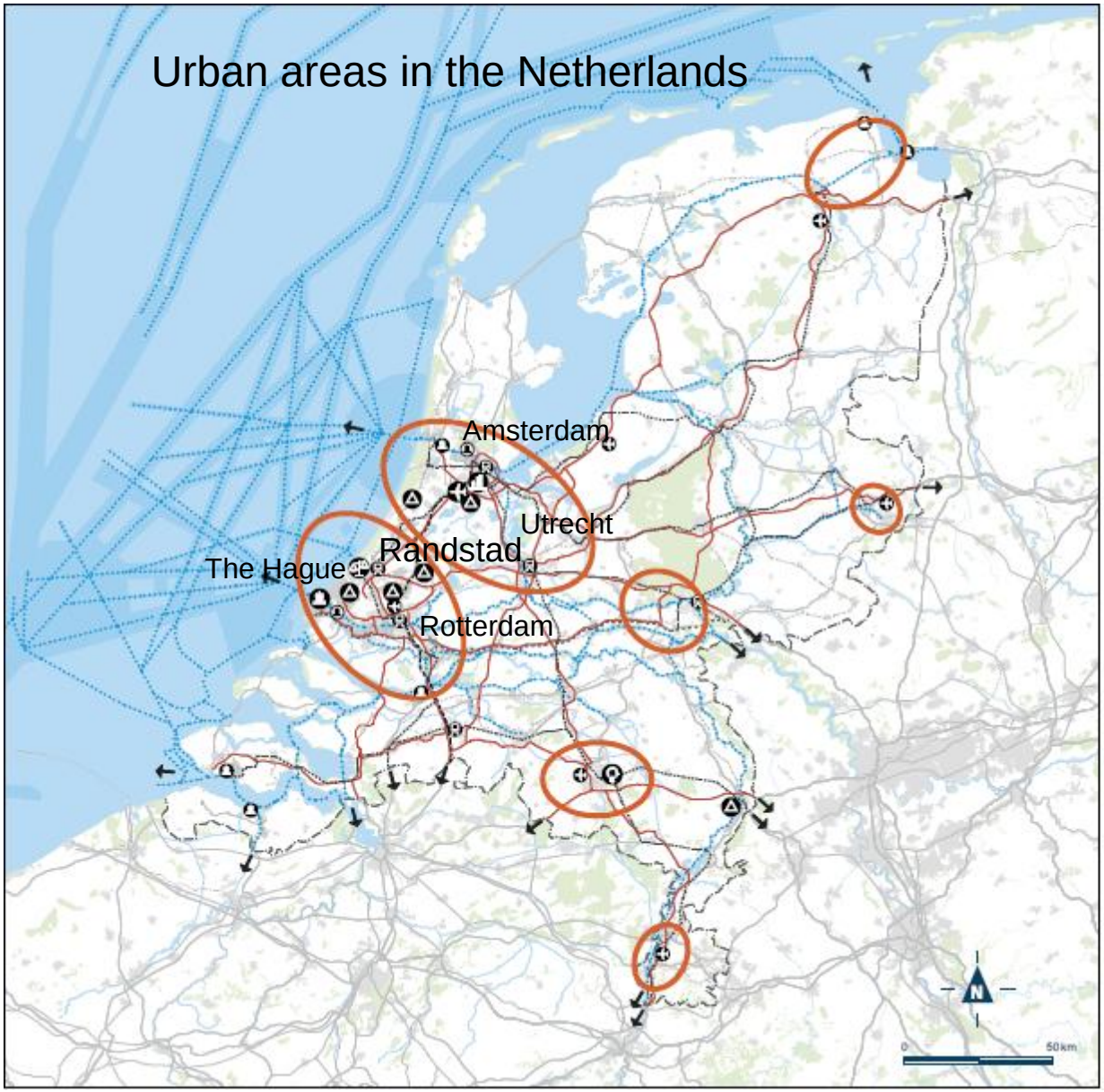


**(INTER)NATIONALE BEREIKBAARHEID VAN STEDELIJKE REGIO'S MET TOPSECTOREN**

International accessibility of urban areas with top value

- Stedelijke regio met topsectoren
- Mainport Schiphol
- Mainport Rotterdam
- Brainport Zuidoost Nederland
- Greenport
- Zuidas
- Stad van internationaal recht, vrede en veiligheid
- HSL /ICE station
- Overige luchthaven van nationale betekenis
- Zeehaven van nationaal belang
- Binnenhaven van nationaal belang

**Voornaamste achterlandverbindingen**

- (Inter)nationaal hoofdwegennet
- (Inter)nationaal hoofdvaarwegennet

**(Inter)nationaal spoorwegennet**

- Hoge snelheids lijn
- Spoor met variabele snelheid
- Overig (inter)nationaal spoorwegennet
- Goederenspoor
- Vereenvoudigde topografie

# Randstad Netherlands

Polycentric area Amsterdam-Haarlem-Leiden-The Hague-Delft-Rotterdam-Dordrecht-Utrecht-Amersfoort-Hilversum-Almere


| | | |
|---|---|---|
| Size | 80 km x 80 km | |
| | 2010 | 2040 |
| Inhabitants: | 7 million | 8 million |

# Major transport flows, corridors and mainports/brainports/top business locations


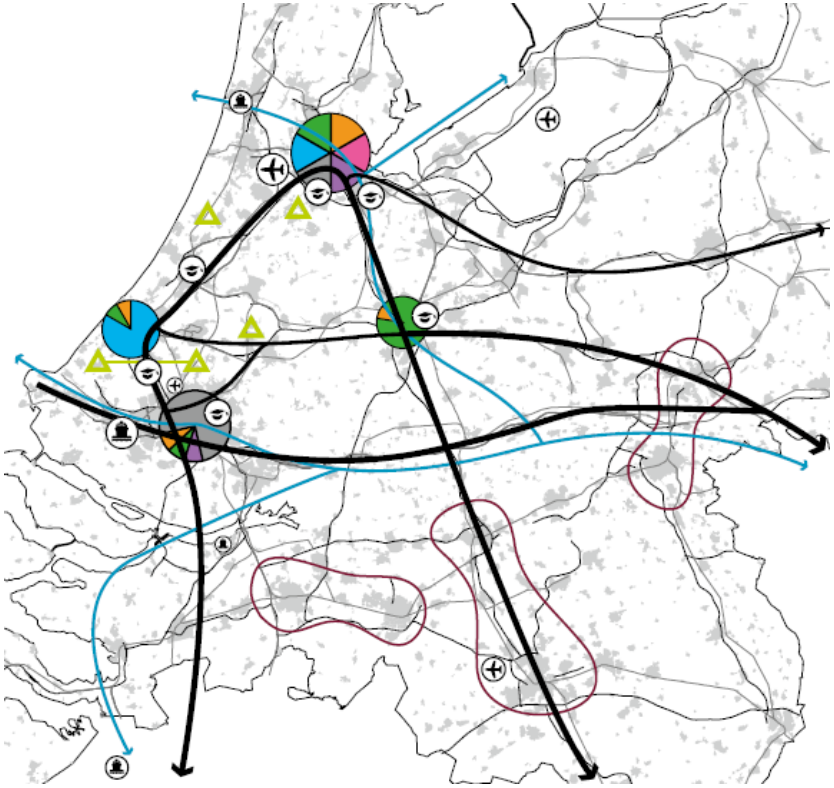

# Randstad 2040 development strategy

- Scaling up and accessibility improvement of the urban regions through higher use of public transport and better coordination with road transport
- Linking space and mobility by consolidation and creation of urban centres
- Optimal use of city centre space making it climate resilient through transformation, restructuring and intensification

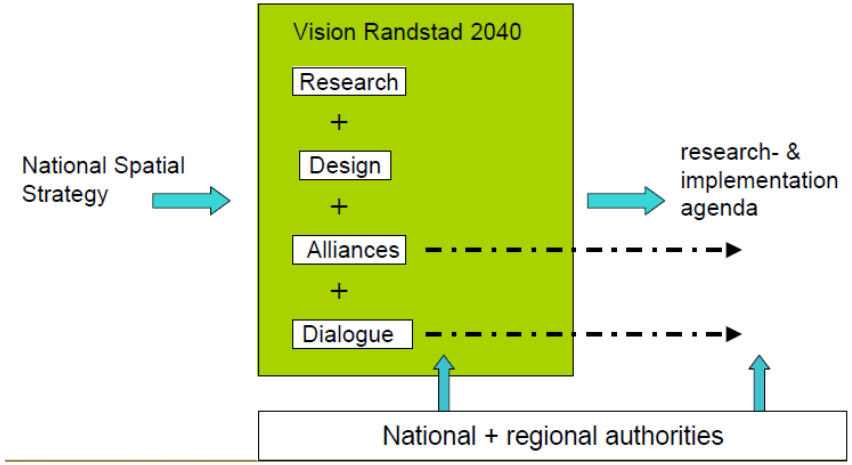

# Randstad 2040 development strategy

- concentration of urbanism in existing urban areas for an impulse in public transport and to protect the value of the countryside
- urban (spatial + social) renewal and transformation + new sites for urban development (Almere)
- offensive to strengthen the regional infrastructure and to improve the accessibility
- development of centres around infrastructure nodes

# Randstad 2040 development strategy

- Take advantage of the metropolitan opportunities of Amsterdam and the diversity of a polycentric region for business locations
- Improve the international connections
- Preserve the hub function of Schiphol airport, as airport of destination in cooperation with regional airports
- Transform the port of Rotterdam into a innovative logistic and energy port
- Strengthen function of the greenports

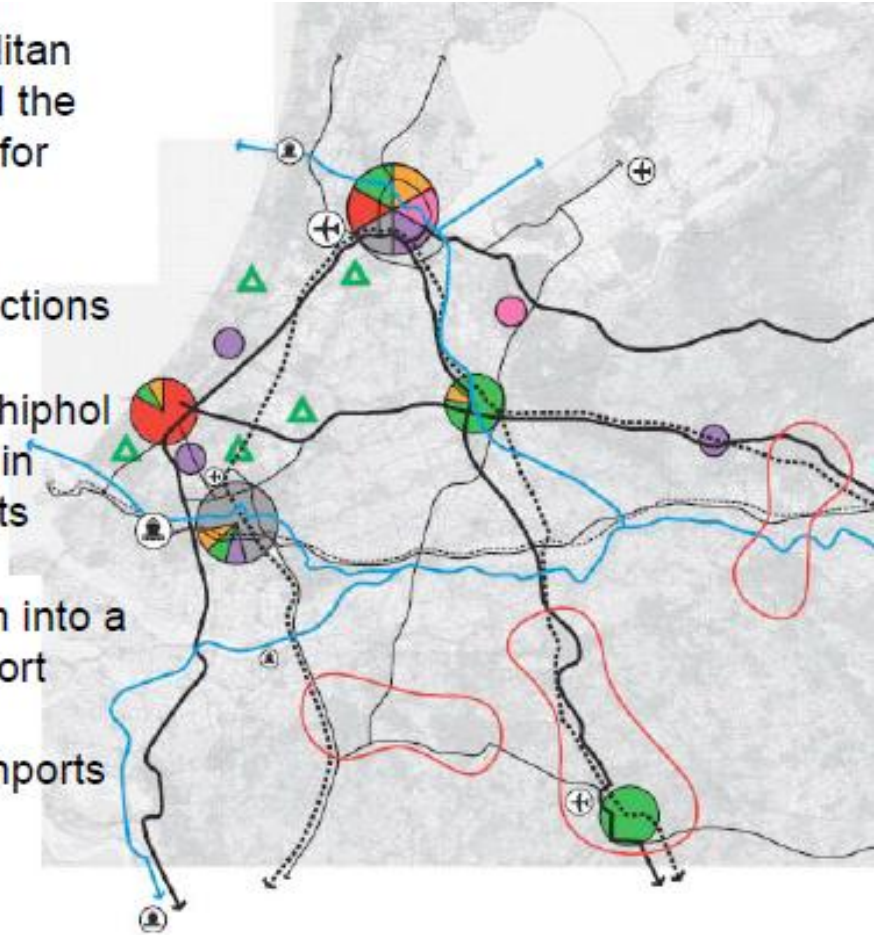

# Functions and accessibility of centres

| | International | Randstad | Regional |
|---|---|---|---|
| Functions | Head offices<br>Top musea<br>Top tourist attractions | Head offices<br>Universities<br>University hospitals<br>Commercial centres | Offices<br>Hospitals<br>Market places<br>Urban housing |
| Accessibility ≤ 30 min | 0.75 – 1 million people | 0.5 - 0.75 million | 0.5 million |
| Accessibility ≤ 60 min | 4 - 5 million | 2 - 3 million | 1 - 2 million |
| Connectivity | International (air)ports and HS train stations | Intercity and HRRT stations, ports | Regional railway stations |

# Main national goals of structural vision Infrastructure and Space

1. Increase of competitiveness through strengthening of spatial-economic structure
   - Resolution of accessibility bottlenecks of main-/brain and greenports
   - Stimulation of spatial developments at national top locations
   - Transition towards sustainable, recoverable energy supply and distribution

2. Improving, maintaining en assuring spatial accessibility
   - Robust main road, railway and inland shipping networks around the big urban areas and hinterland connections including good infrastructure management, maintenance and renovation

   - Reinforcement of transport supply by mode according to demand
     - High-frequency, less interdependant intercity and regional train timetable (2 times 6 trains/h)
     - Segregation of through traffic and local destination traffic on motorways
     - Combination of national and regional PPP investment programs

   - Better intermodal connections, transport chains and multimodal nodes
     - Timetable synchronisation between urban/regional bus and railway lines
     - Good station/platform access and integrated real-time travel information
     - Improvement/extension of P&R, B&R and logistic transhipment facilities

   - Increase of interrelationship with spatial development

   - Incentivising sustainable mobility demand
3. Guaranteeing liveable and safe environment

# Multimodal accessibility of Dutch municipalities 2030

Number of daily arrivals

Average weighted*
accessibility indicator

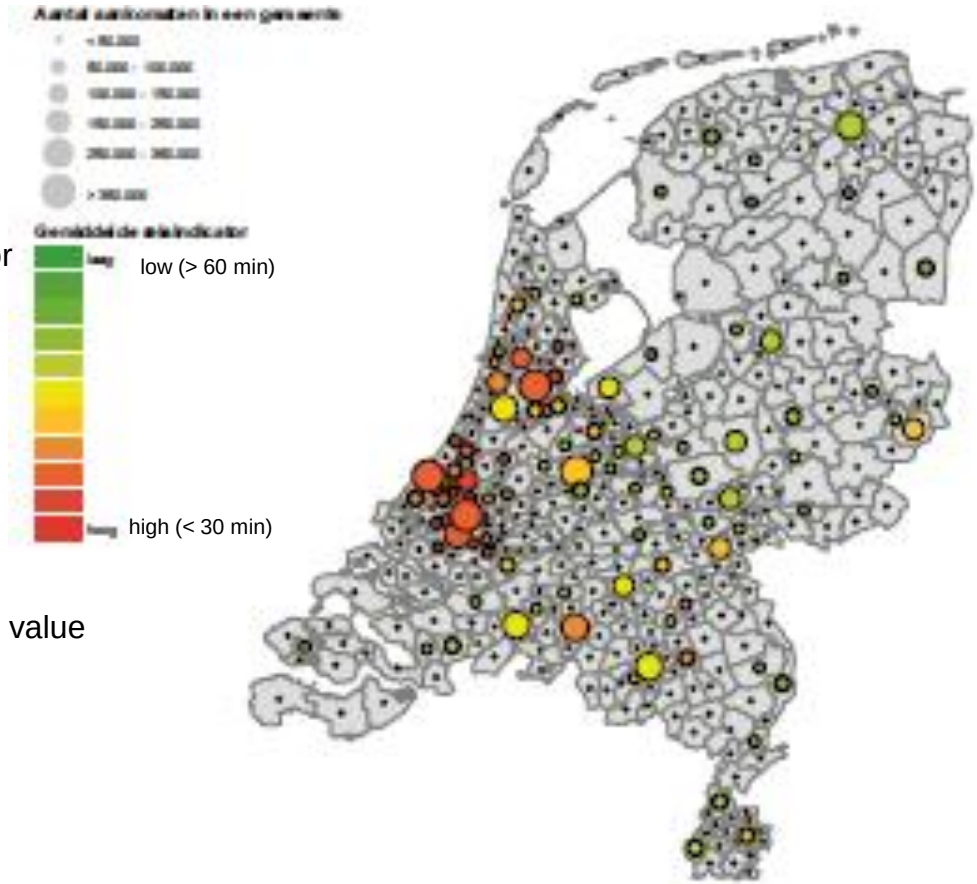


* Travel time x Place value

# Public transport/car travel time ratio of city centres

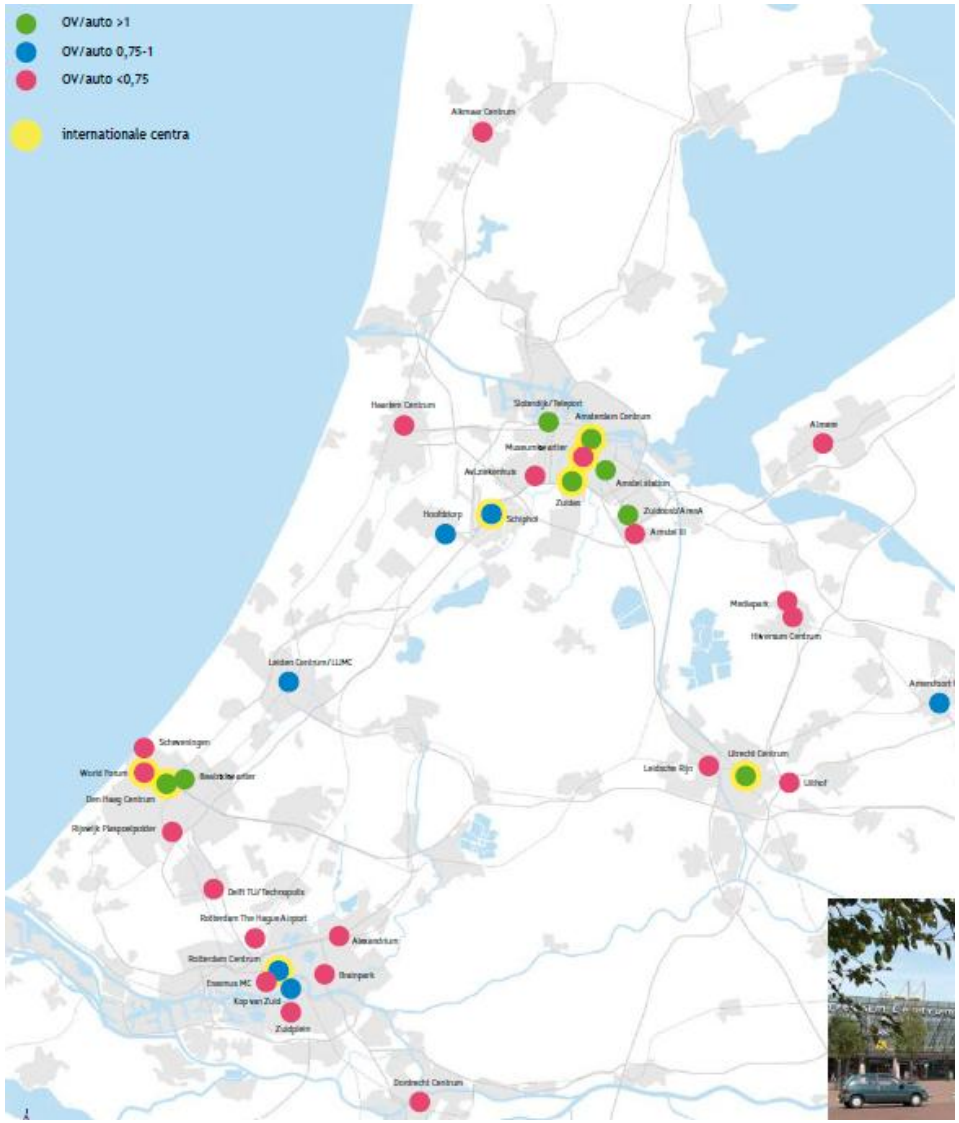


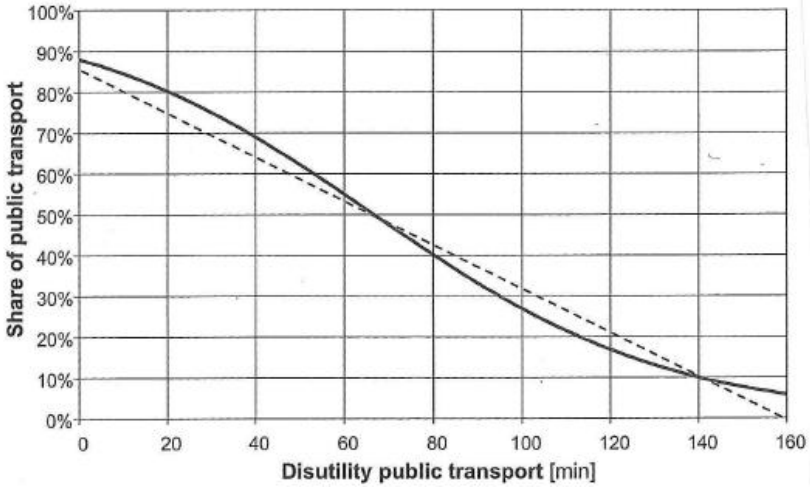

# Dutch railway network

**LANDELIJK SPOORWEGENNET**

Existing routes

Bestaand spoorwegennet

**Ruimtelijke reserveringen**

Nieuwe verbinding

**Uitbreiding/ Intensivering**

Planstudiegebied intensiveringen treindienstmaatregelen volgens Programma Hoogfre — High-frequent corridors

In studie zijnde alternatieve goederenroute van Programma Hoogfrequent Spoorvervo — Alternative freight corridors

Vereenvoudigde topografie

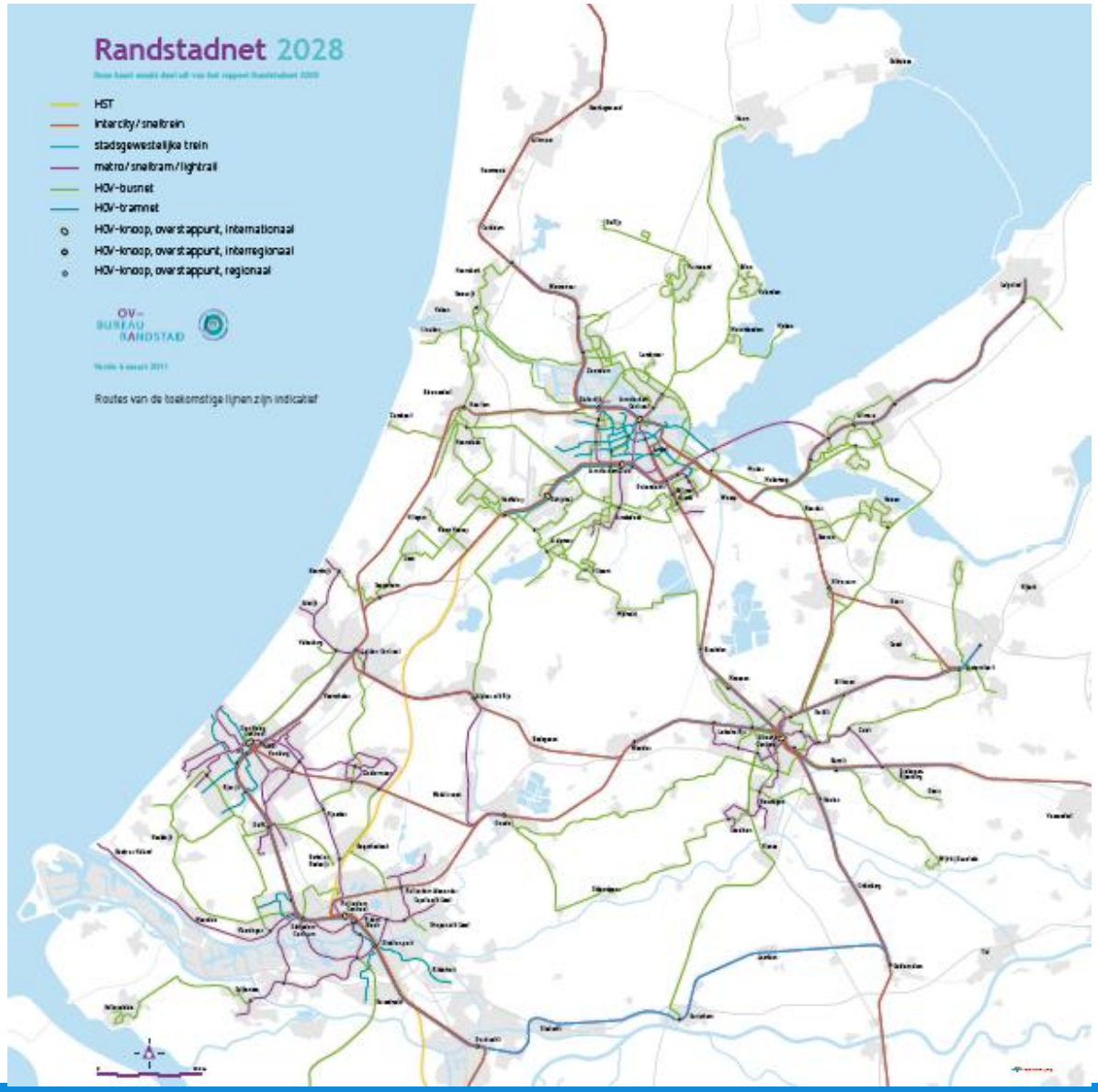
Randstadnet 2028
HST
intercity/snaltrein
stadsgewestelijke trein
metro/snaltram/lightrail
HOV-busnet
HOV-tramnet
HOV-knoop, overstappunt, internationaal
HOV-knoop, overstappunt, interregionaal
HOV-knoop, overstappunt, regionaal
OV-BUREAU RANDSTAD
Routes van de toekomstige lijnen zijn indicatief

# Sustainable Accessibility of the Randstad (SAR) research program

## Universities
- U Amsterdam
- VU Amsterdam
- TU Delft
- TU Eindhoven
- U Utrecht
- U Nijmegen
- U Twente

SAR

2009-2015

€10 M

## Disciplines
- Transportation Planning
- Urban Planning
- Geography
- Spatial Economics
- Policy Analysis
- Operations Research

- Value of recreation transport
- Synchro-nizing activity networks
- Sustain-able multi-modal freight transport
- Sustain-able reliable multi-modal networks
- Climate change, spatial develop-ment & transport
- Transport pricing policies
- Intelligent traveller information
- Mobility manage-ment
- Effects of transition to electric drive mobility
- Sustain-able main-tenance policy of infra-structure
- Imple-menting TOD
- TOD in Randstad south

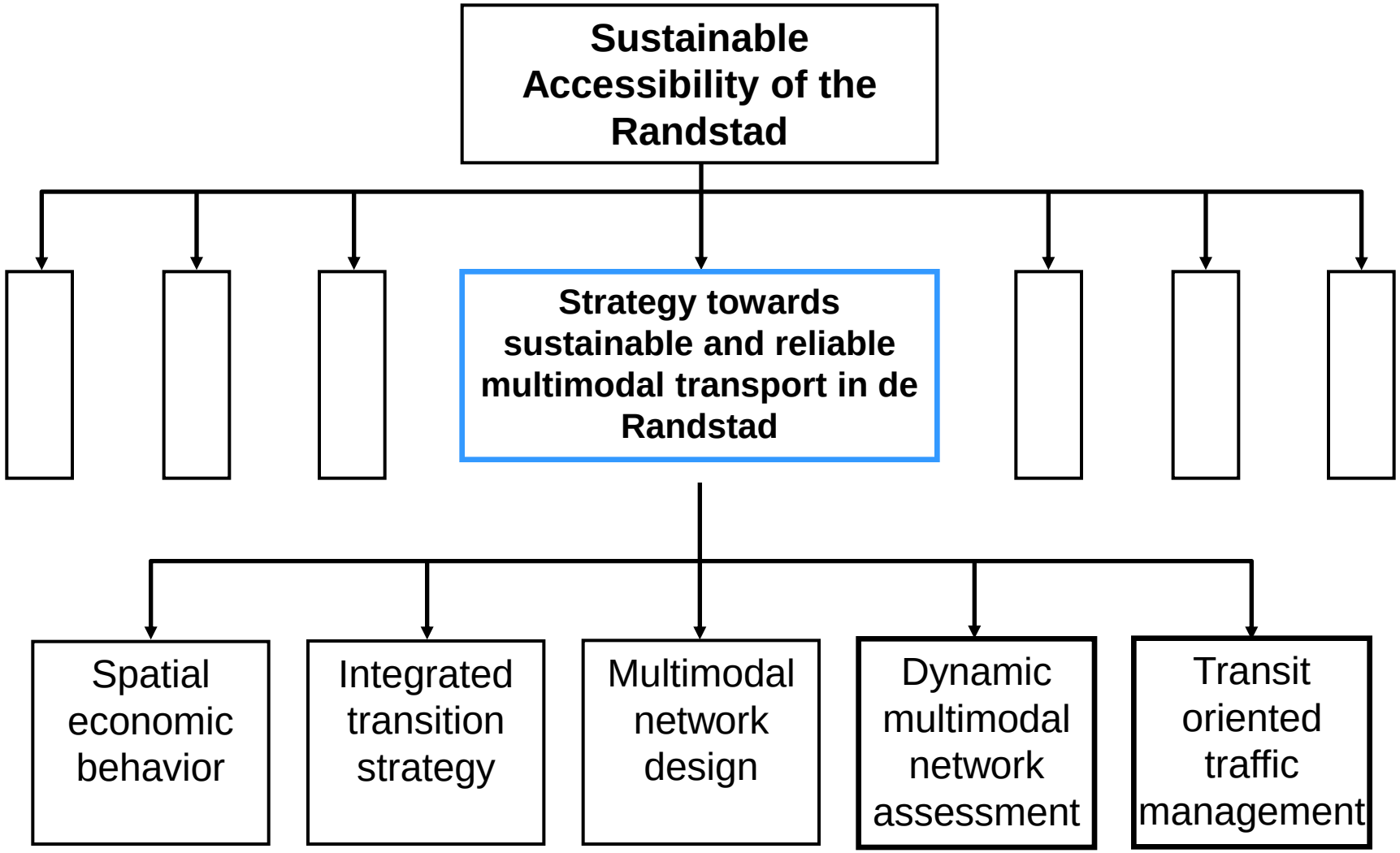
Sustainable Accessibility of the Randstad
Strategy towards sustainable and reliable multimodal transport in de Randstad
Spatial economic behavior
Integrated transition strategy
Multimodal network design
Dynamic multimodal network assessment
Transit oriented traffic management

# Background

1. Transport system of the Randstad is heavily used
2. Negative consequences

   Delay
   Unreliability
   Environmental damage
   Energy consumption
   Decreasing liveability
   Space consumption

3. Prospects

   Growth in population and jobs
   Increasing mobility demand
   Bottlenecks will continue to exist
   Extra social costs

4. Limitations

   Expansion of the car system is limited
   Political, financial, and safety constraints even in combination with ADAS, electric vehicles, traffic management, etc.

# Mobility characteristics 2009 NL

16.8 million trip/d, unimodal **97%** - inter- & multimodal 3%

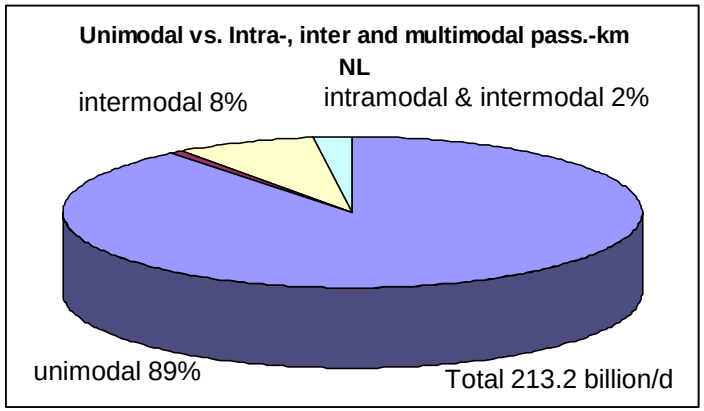


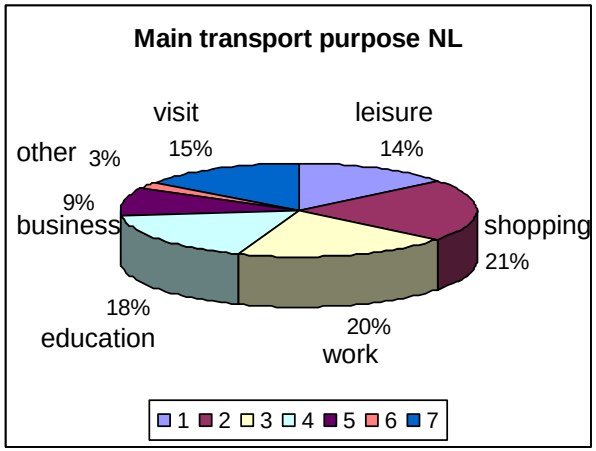


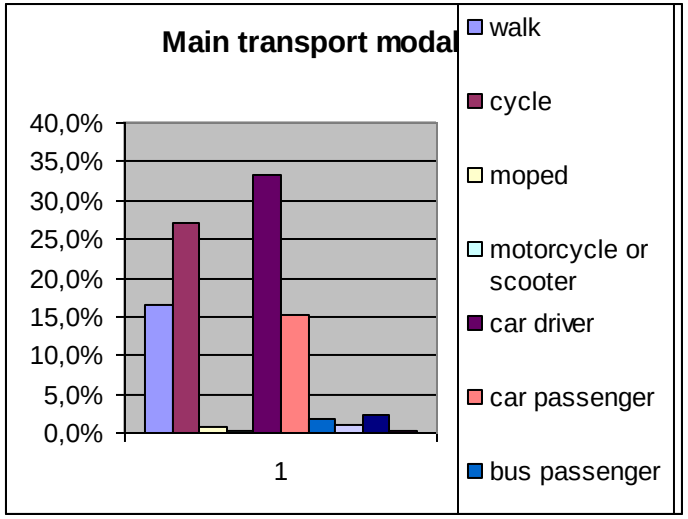


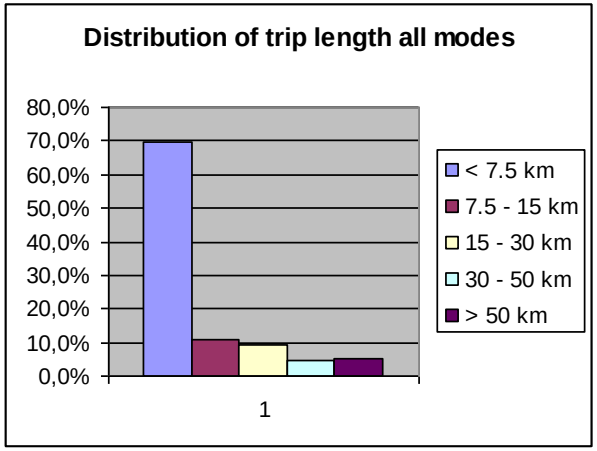

# Relevance of multi-modal transport NL

- Multi-modal person trips are niche market, albeit important:
  - 82% all train trips are multi-modal and intra-modal
  - 66% of all multimodal trips by train
  - 10% of total distance traveled is multi-modal
  - 15% of all inter-city trips to/from one city center is multi-modal
  - Above average multi-modal trips done
    - for commuting and education
    - over longer distances
    - during peak hour periods.

- Multi-modal person trips are important for sustainable cities

- Present transit system is insufficient alterative

# Composition of SRMT research program

**Project 1**
Spatial economic behavior

vrije Universiteit amsterdam

**Project 2**
Integrated transition strategy

UNIVERSITY OF AMSTERDAM

**Project 3**
Multimodal network design

UNIVERSITEIT TWENTE.

**Project 4**
Multimodal network assessment

TU Delft

**Project 5**
Transit oriented traffic management

TU Delft

# Approach

1. Use the strengths of each mode

   Often cars are sub-optimally used
   Offer high quality transit where it performs best

2. Integrate different modes

   Offer private-public transfer connections
   Synchronize public transport services

3. Integrate spatial and network planning

   Focus on spatial planning around stations

4. Develop a transition strategy

# 1. Use the strengths of each mode

1. Public transport

   High capacity
   Sustainable (energy, space, environment)
   Fast on large flow corridors

2. Car

   Flexible
   Fast in low density areas

3. Urban transit

   High capacity
   Increase local livability
   Sustainable

4. Bicycle

   Flexible
   Sustainable


# 2. Integrate different modes

1. The Randstad (Amsterdam-The Hague-Rotterdam-Utrecht)

   High concentrations of activities
   Train, bus, metro and tram available
   Bicycle facilities
   Limited space for cars
   Good conditions for sustainable modes

- Multimodal trips

  Multiple modes will be used
  Combinations of modes
  Benefit from the strengths of both modes
  Modes support each other


# 3. Integrate spatial and network planning

1. High density locations
   =>
   High capacity transport systems
   Trains/Metro/Tram

2. Widely spread origins and destinations
   =>
   Flexible transport systems
   Car/Bicycle

3. Locate activities near multimodal transfer nodes
   Investments more efficient
   No need to expand current urban space

# 4. Develop a transition strategy

1. Transit oriented strategy
2. Adaption of the strategy

   Actors (public, private, customers)
   Conditions (national, regional, local)

3. Implementation

   Crucial actions for success
   Planning, coordination and coalition
   Integration transport and land use

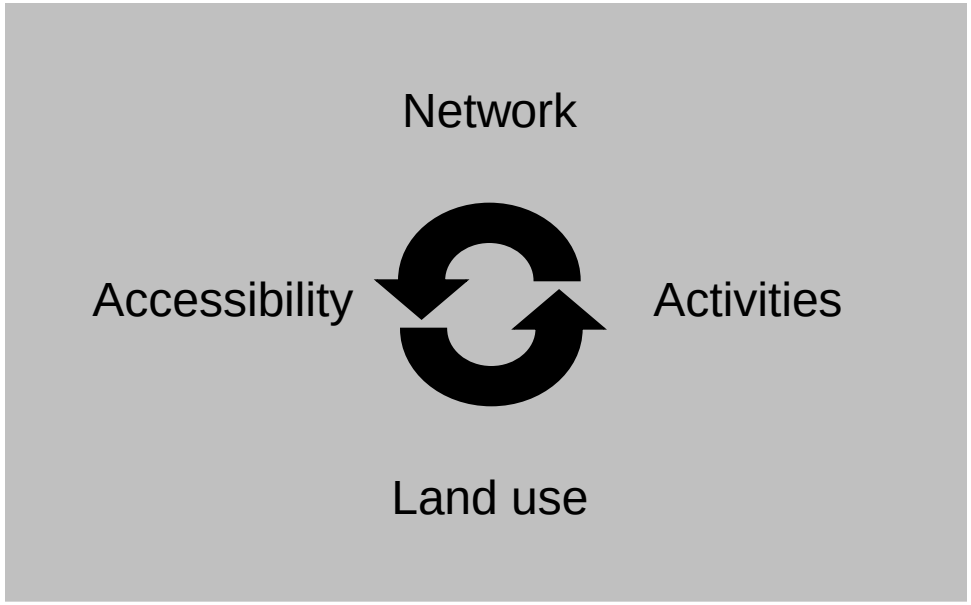

# Research goals

1. Develop strategies to come to a transportation system for the Randstad as sustainable as possible

2. Focus on the design of a multimodal transport system and its interaction with spatial development

3. Design and assess a set of promising networks

4. Develop a transition strategy towards transit oriented development

# Spatial economic behavior

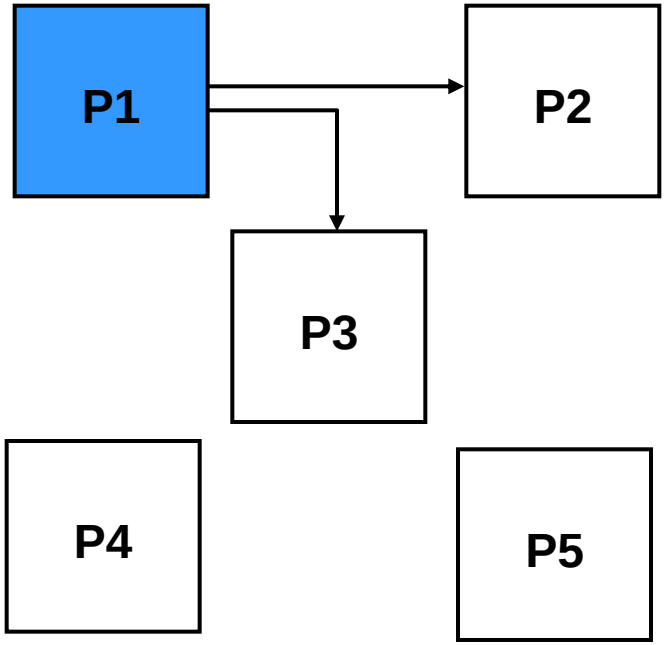


1. How does multimodal network design affects location choice decisions?
   Households
   Firms

- And the other way around

- Input for projects 2 and 3
   Spatial patterns
   Land use mechanisms

# Integrated transition strategy

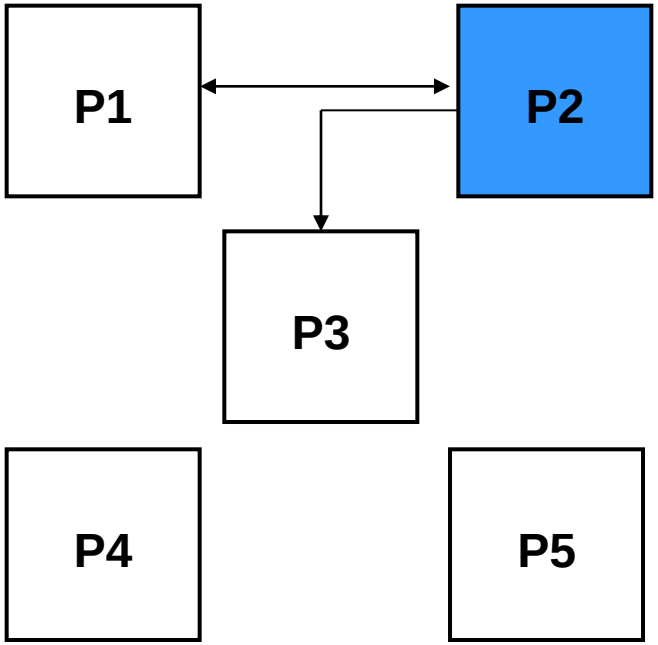


1. How should a spatial and transport transition towards a sustainable transport system look like?
2. Factors that hamper or facilitate transit oriented development

   Case studies abroad (Zurich, Karlsruhe, Napels)
3. Apply these insights to the Randstad

# Multimodal network design

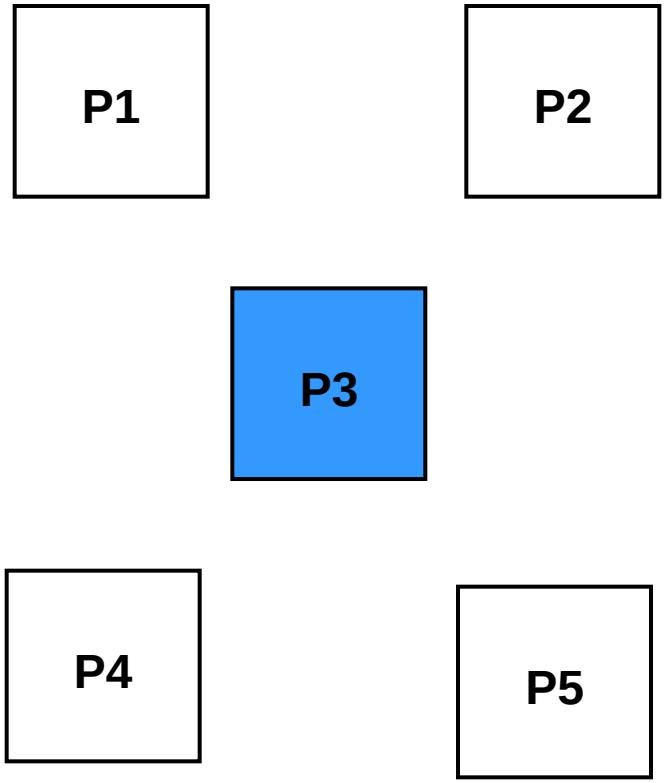


1. How should a multimodal network for the Randstad look like?

   Transit lines
   Frequencies
   Transfer facilities

- Design promising network alternatives

   Multiple criteria
   Multiple stakeholders
   Different future scenario's

3. Test robustness

   Short term
   Long term

# Transit oriented traffic management

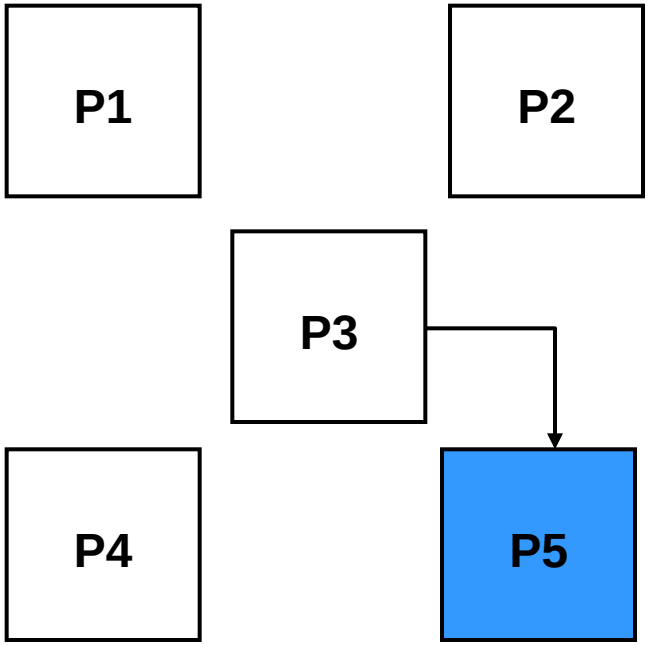


1. How to improve the reliability of multimodal travel chains by scheduling and traffic management ?

   Synchronize arrivals and departures

   Adjustment in case of disturbances

2. Design stable and robust timetables

   For networks from project 3

3. Estimate/simulate critical link/station/network capacity consumption and delay propagation

# Multimodal network assessment

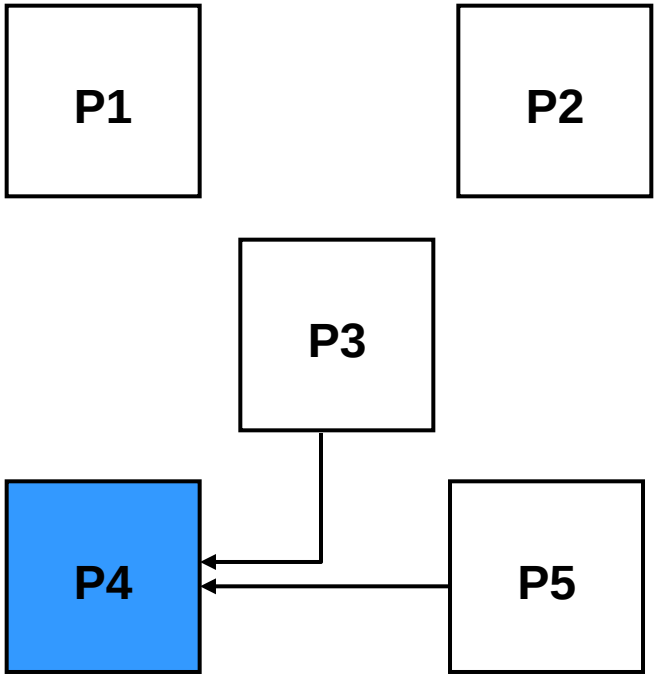


1. How to assess the performance of dynamic large scale multimodal transport systems?

   Accessibility

   Sustainability (energy, livability, environment)

- Lower level model for network optimization

   Network design

   Timetable design

3. Detailed assessment of promising networks

# References


- Ministerie van Infrastructuur en Ruimte (2012), Structuurvisie Infrastructuur en Ruimte, http://www.rijksoverheid.nl/onderwerpen/ruimtelijke-ordening-en-bereikbaarheid/documenten-en-publicaties/rapporten/2012/03/13/structuurvisie-infrastructuur-en-ruimte.html
- Minister of Housing, Spatial Planning and the Environment (2008), Randstad 2040 Summary of the Structural Vision, http://www.rijksoverheid.nl/documenten-en-publicaties/brochures/2009/03/01/randstad-2040-summary-of-the-structural-vision.html
- OV Bureau Randstad (2011), Synergie tussen OV en RO, http://ov-bureaurandstad.nl/documenten
- Netherlands Science Organisation (NWO), Sustainable Accessibility of the Randstad, http://www.nwo.nl/nwohome.nsf/pages/NWOA_794DXJ_Eng